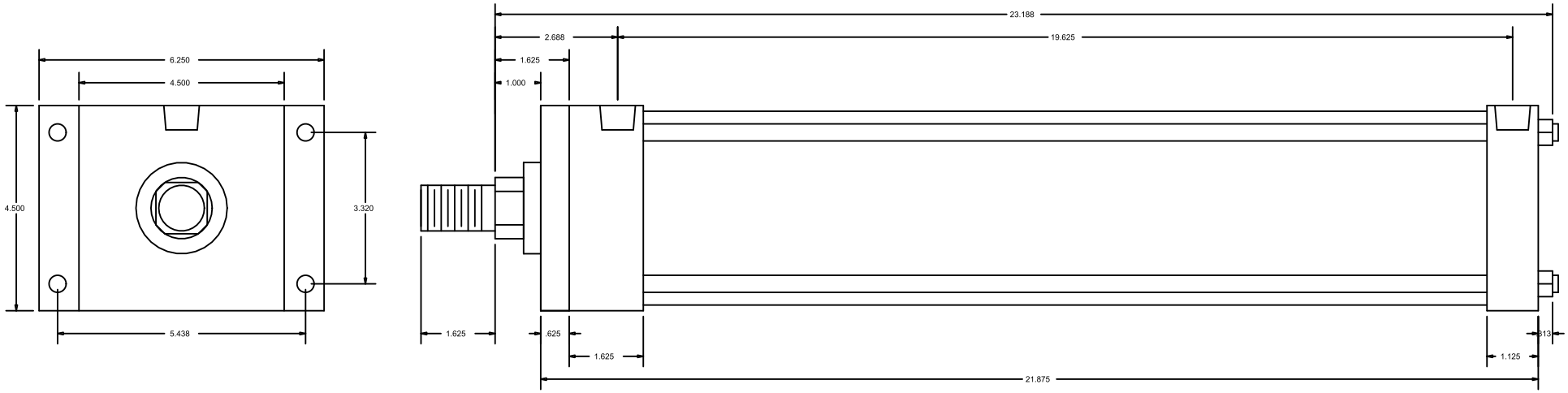

CylindersNow.com
Model No: CN4AFF17NCK1375
Logia No: CN4AFF17NCK1375
Rod End Thread: Male 1 - 14 x 1-5/8
Bore: 4"
Shaft Dia: 1 3/8"
NPT Port Size: 1/2
Mount: FF
Stroke: 17
Series: A
Mount Bolt Size: 3/8