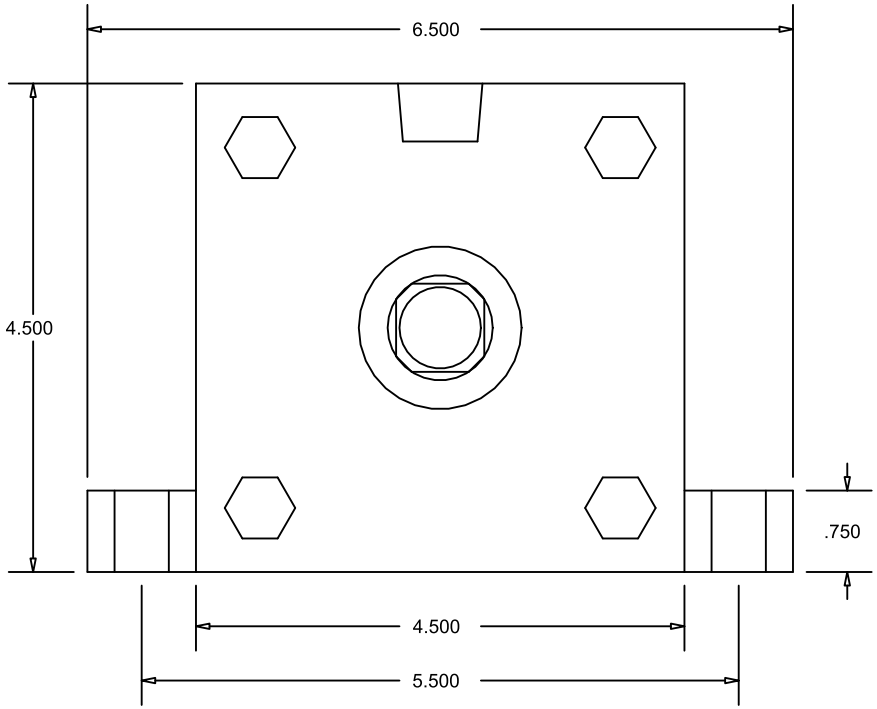

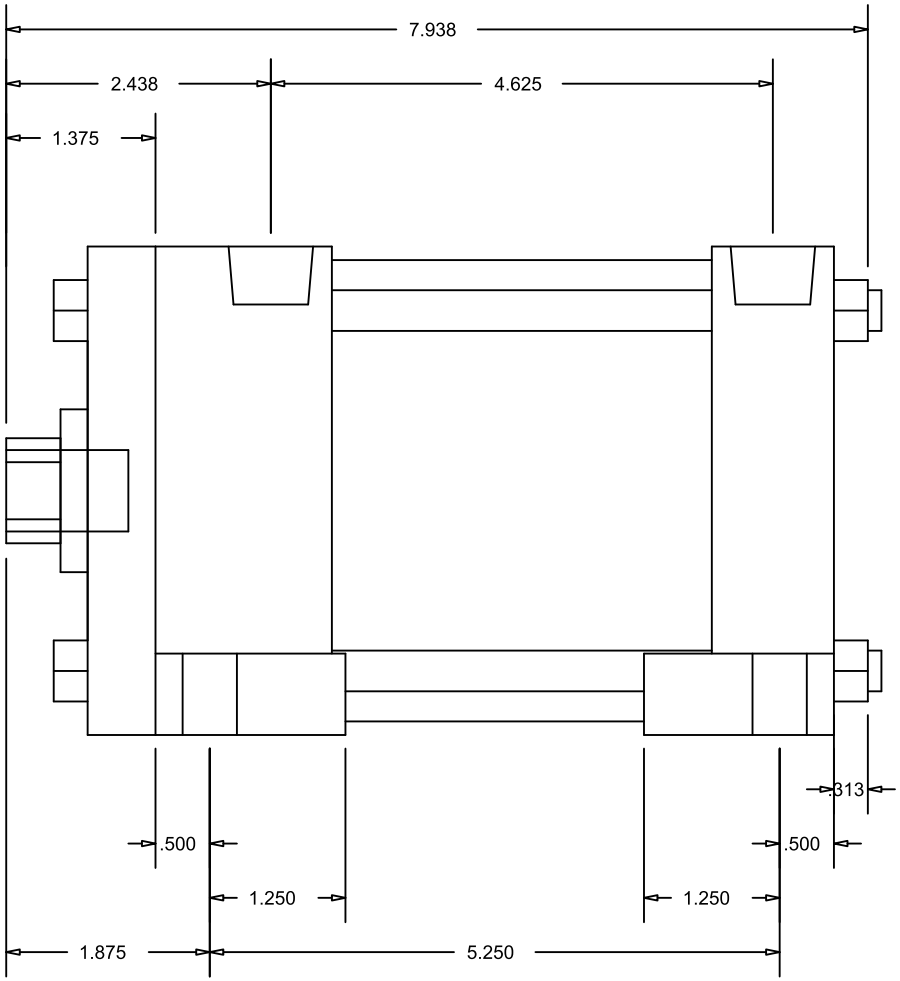

CylindersNow.com
Model No: CN4ASL2NCKS4
Logia No: CN4ASL2NCKS4
Rod End Thread: Female 3/4 - 16 x 1-1/8
Bore: 4"
Shaft Dia: 1"
NPT Port Size: 1/2
Mount: SL
Stroke: 2
Series: A
Mount Bolt Size: 3/8