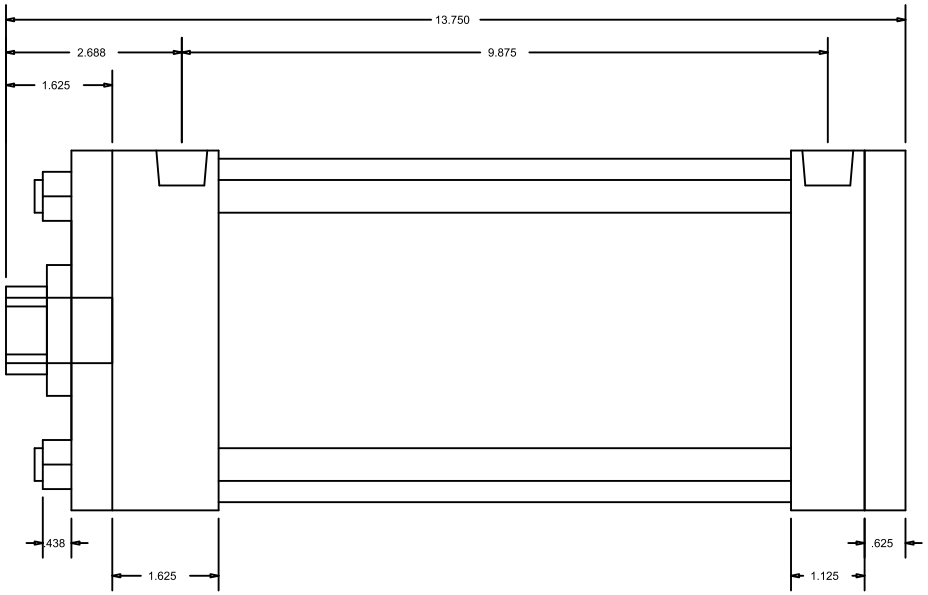

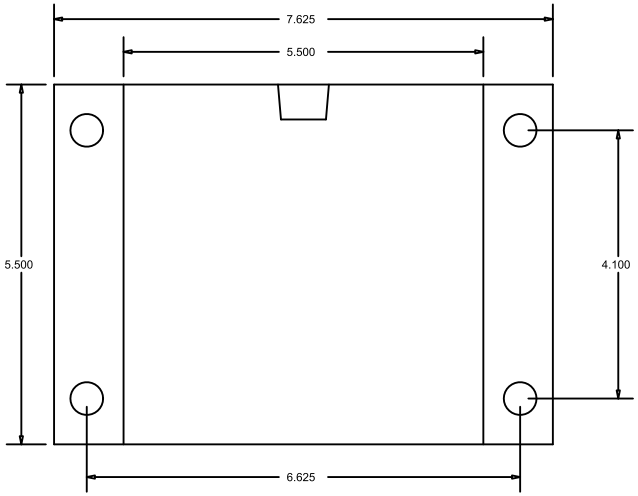

CylindersNow.com
Model No: CN5ARF7NCK1375S4
Logia No: CN5ARF7NCK1375S4
Rod End Thread: Female 1 - 14 x 1-5/8
Bore: 5"
Shaft Dia: 1 3/8"
NPT Port Size: 1/2
Mount: RF
Stroke: 7
Series: A
Mount Bolt Size: 1/2