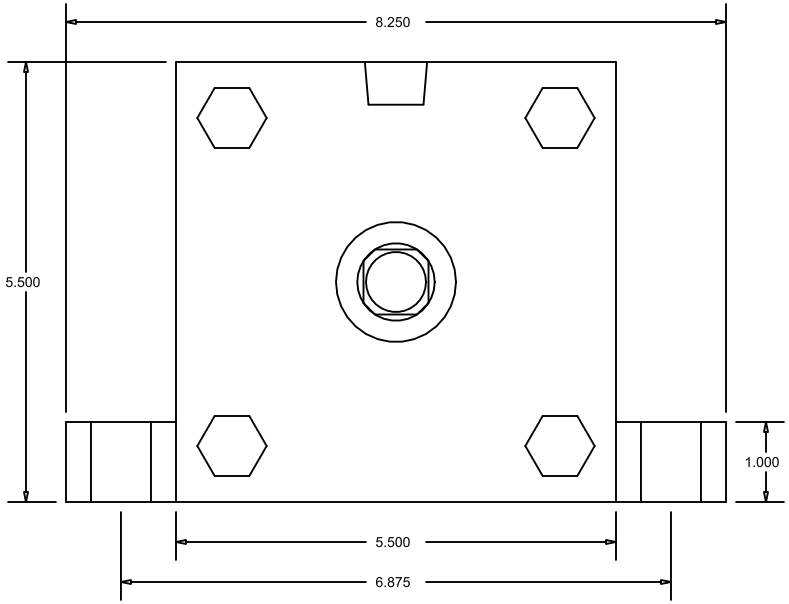

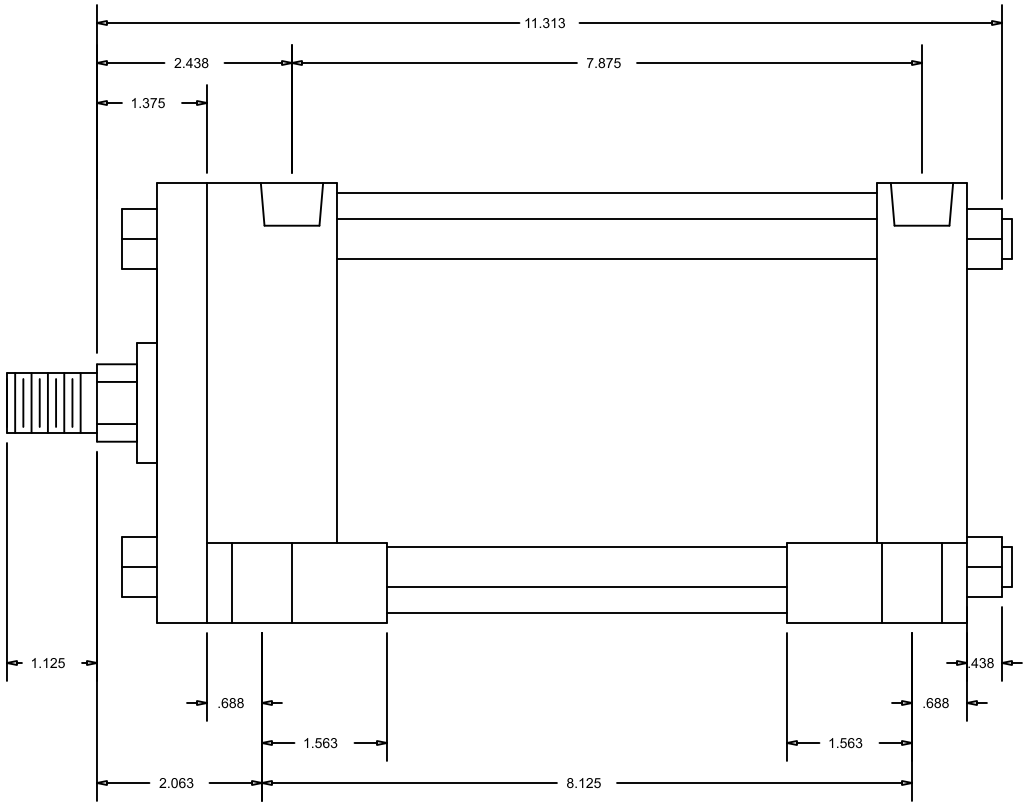

CylindersNow.com
Model No: CN5ASL5NC
Logia No: CN5ASL5NC
Rod End Thread: Male 3/4 - 16 x 1-1/8
Bore: 5"
Shaft Dia: 1"
NPT Port Size: 1/2
Mount: SL
Stroke: 5
Series: A
Mount Bolt Size: 1/2