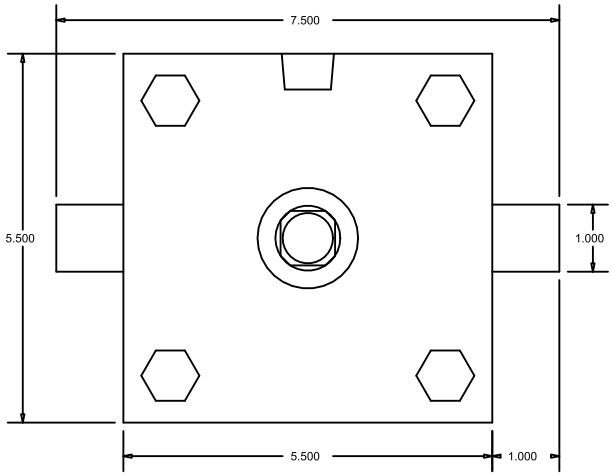

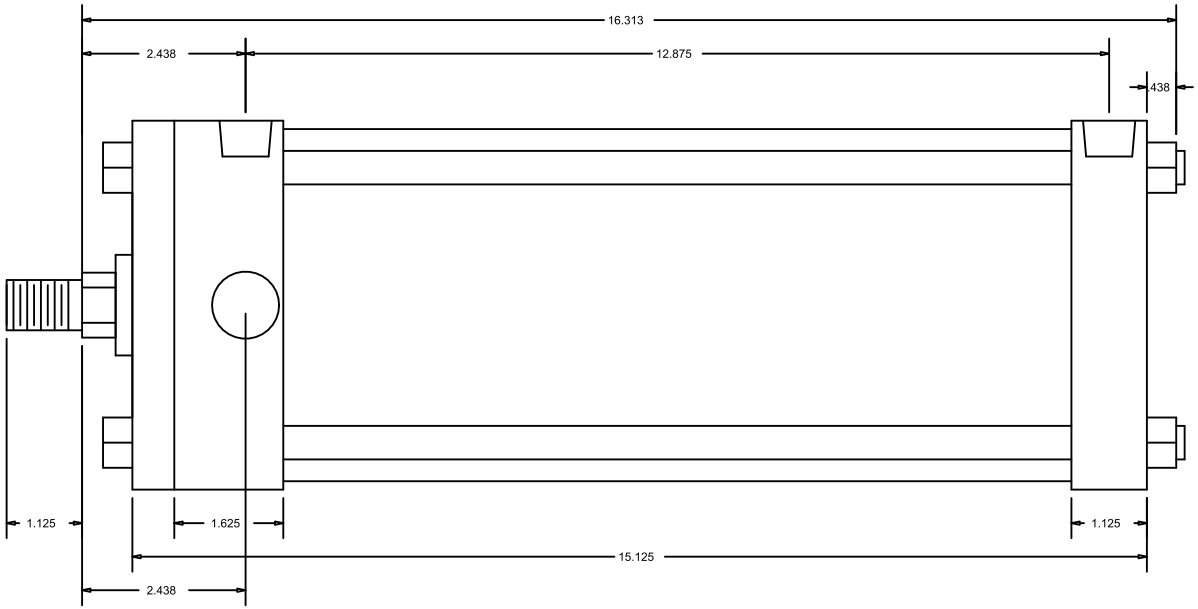

CylindersNow.com
Model No: CN5ATF10NC
Logia No: CN5ATF10NC
Rod End Thread: Male 3/4 - 16 x 1-1/8
Bore: 5"
Shaft Dia: 1"
NPT Port Size: 1/2
Mount: TF
Stroke: 10
Series: A