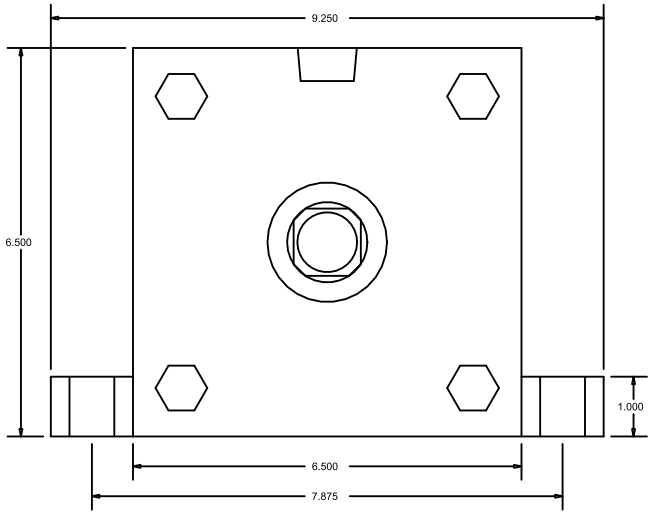

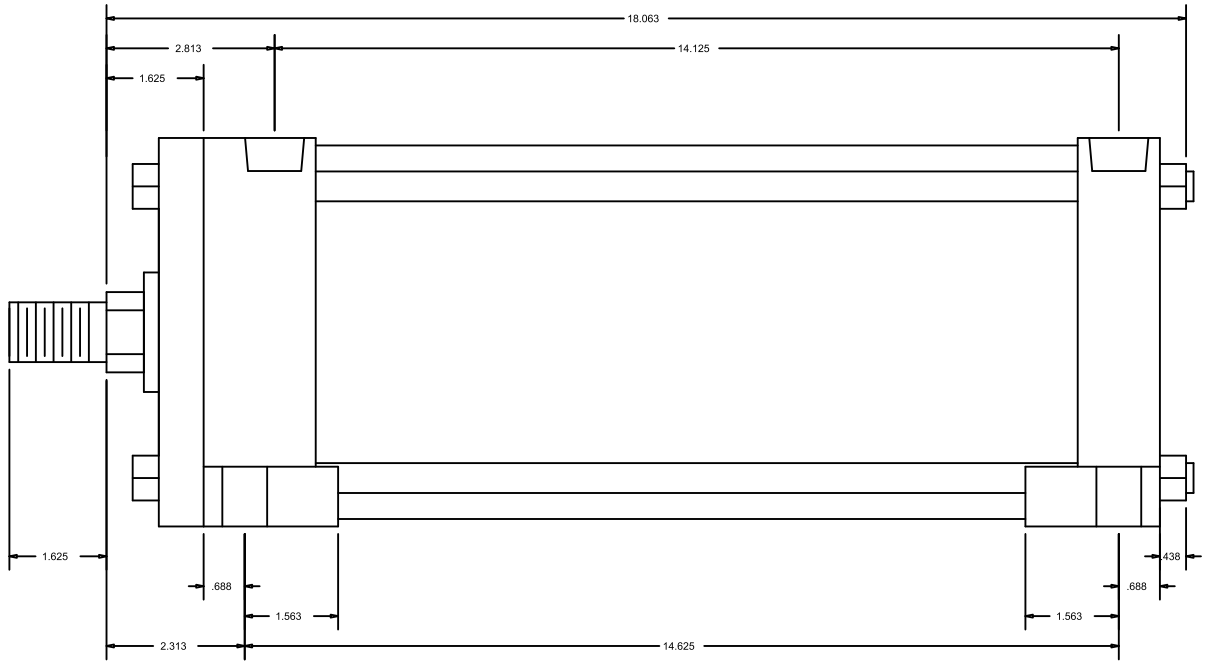

CylindersNow.com
Model No: CN6ASL11NC
Logia No: CN6ASL11NC
Rod End Thread: Male 1 - 14 x 1-5/8
Bore: 6"
Shaft Dia: 1 3/8"
NPT Port Size: 3/4
Mount: SL
Stroke: 11
Series: A
Mount Bolt Size: 1/2