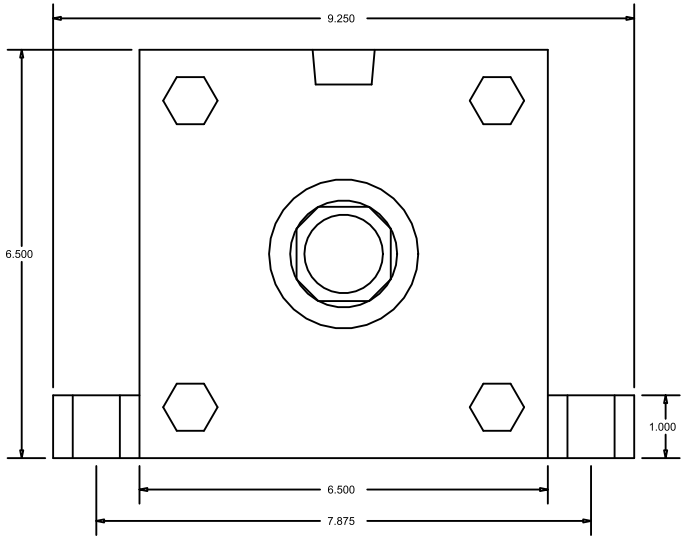

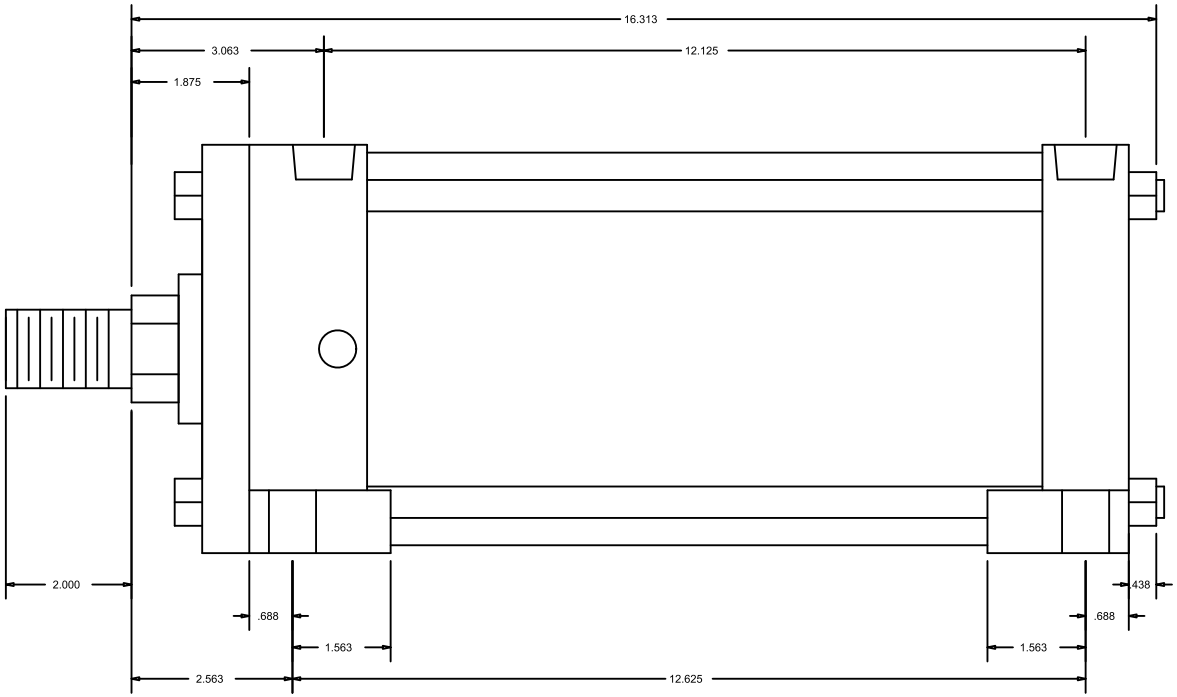

CylindersNow.com
Model No: CN6ASL9CCK175
Logia No: CN6ASL9CCK175
Rod End Thread: Male 1-1/4 - 12 x 2
Bore: 6"
Shaft Dia: 1 3/4"
NPT Port Size: 3/4
Mount: SL
Stroke: 9
Series: A
Mount Bolt Size: 1/2