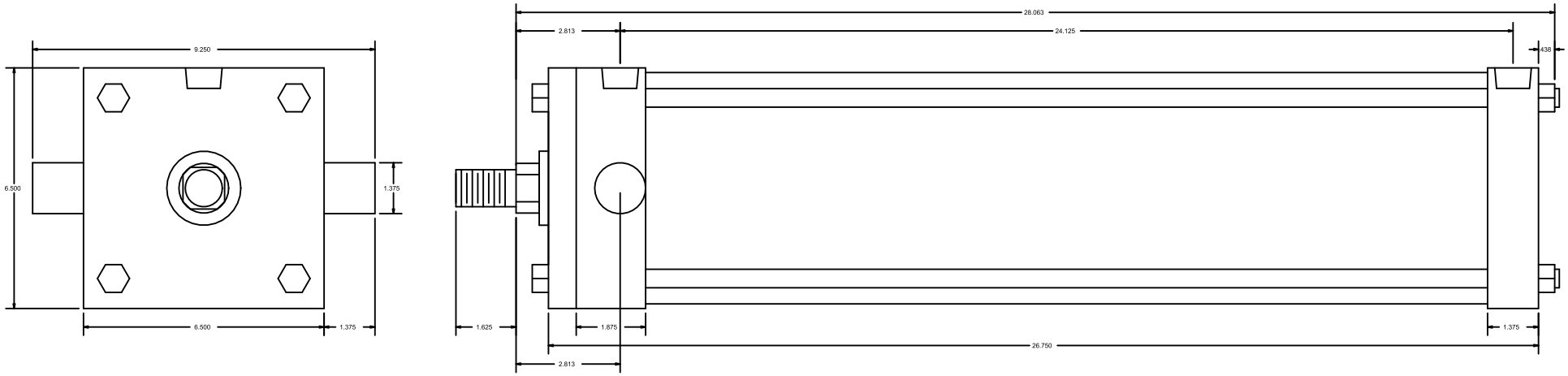

CylindersNow.com
Model No: CN6ATF21NC
Logia No: CN6ATF21NC
Rod End Thread: Male 1 - 14 x 1-5/8
Bore: 6"
Shaft Dia: 1 3/8"
NPT Port Size: 3/4
Mount: TF
Stroke: 21
Series: A