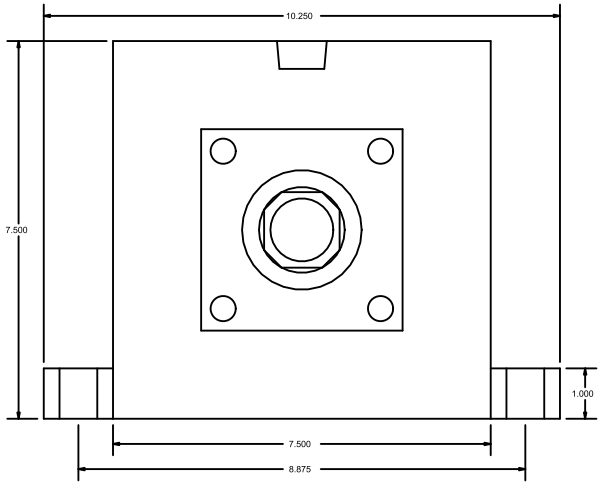

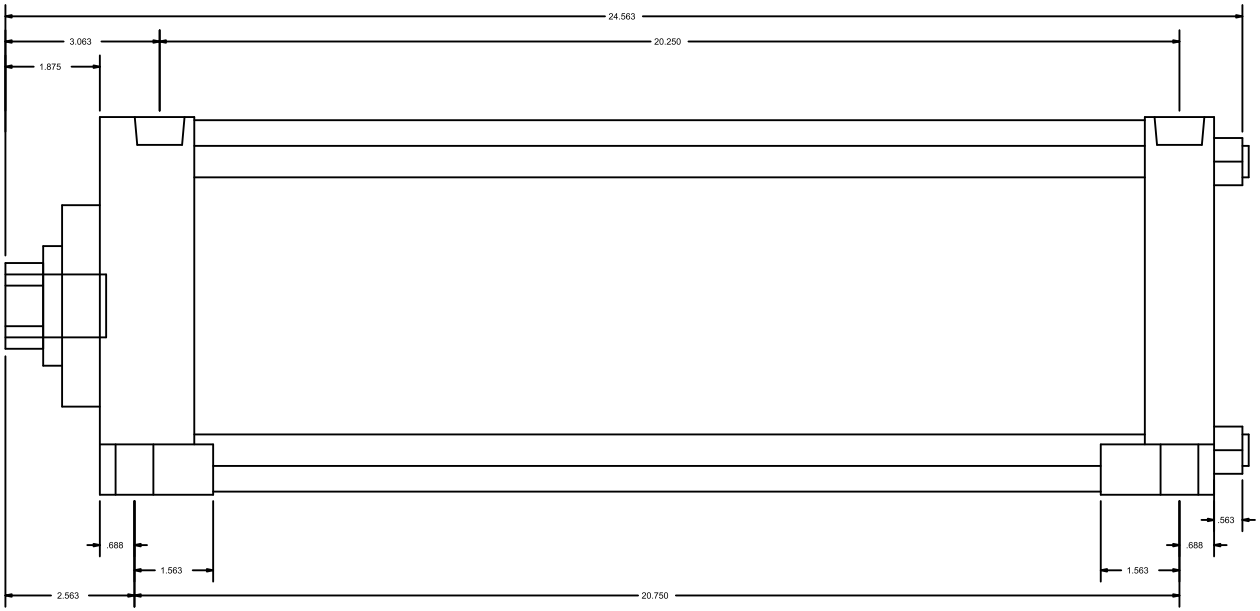

CylindersNow.com
Model No: CN7ASL17NCK175S4
Logia No: CN7ASL17NCK175S4
Rod End Thread: Female 1-1/4 - 12 x 2
Bore: 7"
Shaft Dia: 1 3/4"
NPT Port Size: 3/4
Mount: SL
Stroke: 17
Series: A
Mount Bolt Size: 1/2