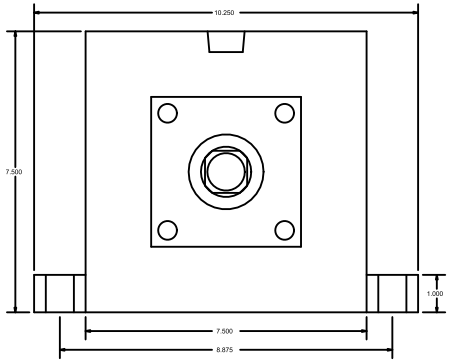

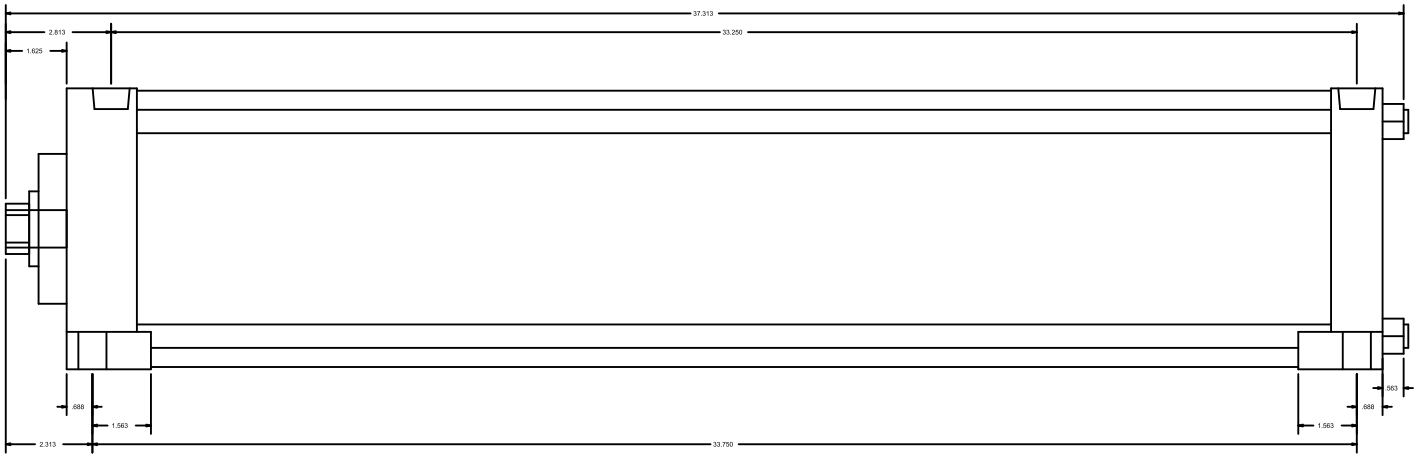

CylindersNow.com
Model No: CN7ASL30NCKS4
Logix No: CN7ASL30NCKS4
Rod End Thread: Female 1 - 14 x 1-5/8
Bore: 7"
Shaft Dia: 1 3/8"
NPT Port Size: 3/4
Mount: SL
Stroke: 30
Series: A
Mount Bolt Size: 1/2