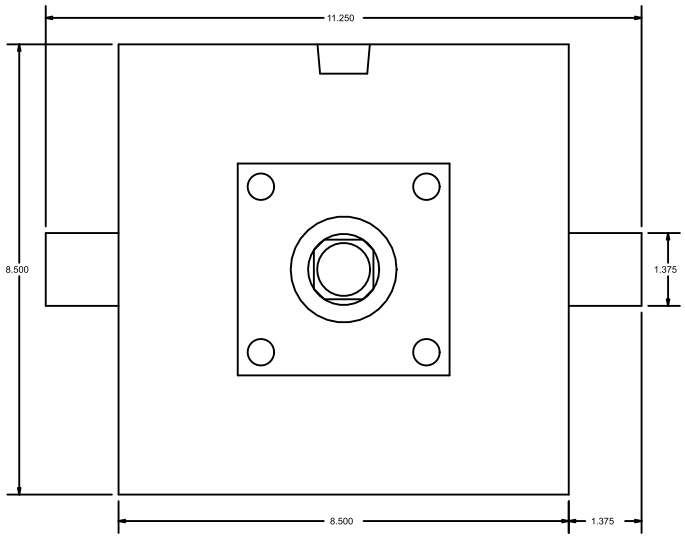

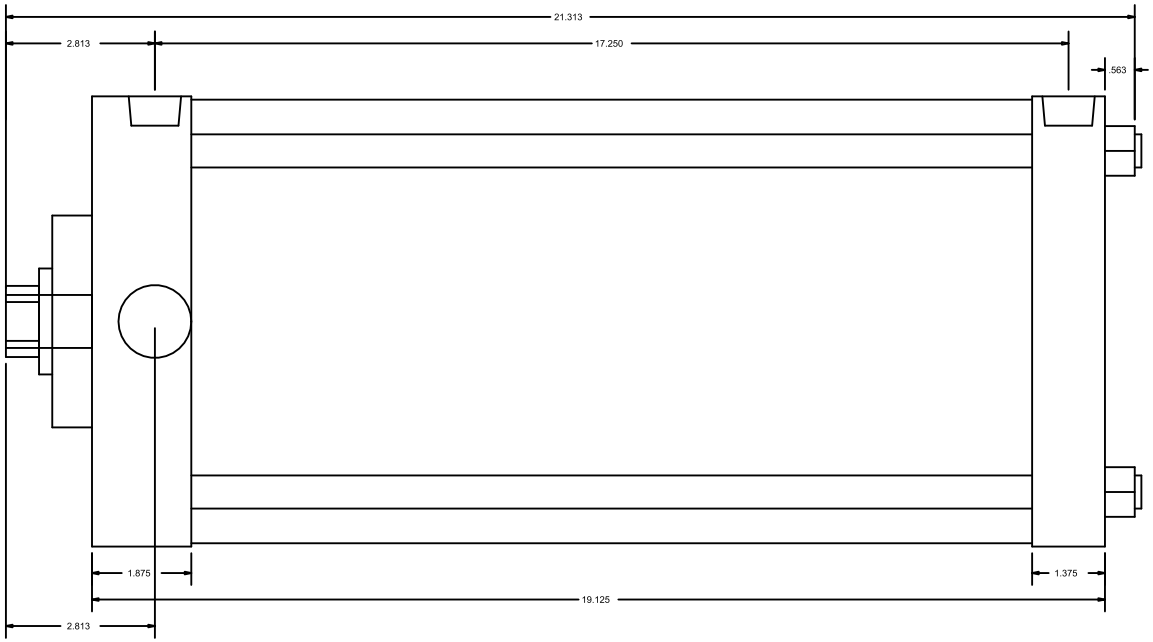

CylindersNow.com
Model No: CN8ATF14CCKS4
Logia No: CN8ATF14CCKS4
Rod End Thread: Female 1 - 14 x 1-5/8
Bore: 8"
Shaft Dia: 1 3/8"
NPT Port Size: 3/4
Mount: TF
Stroke: 14
Series: A