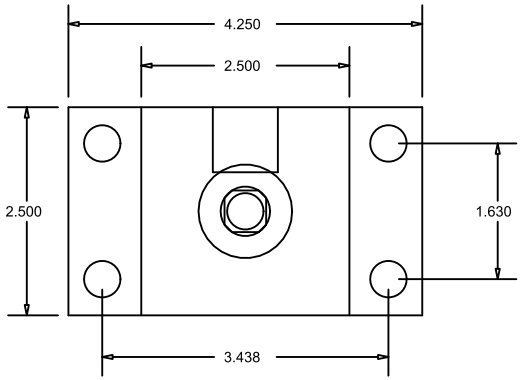

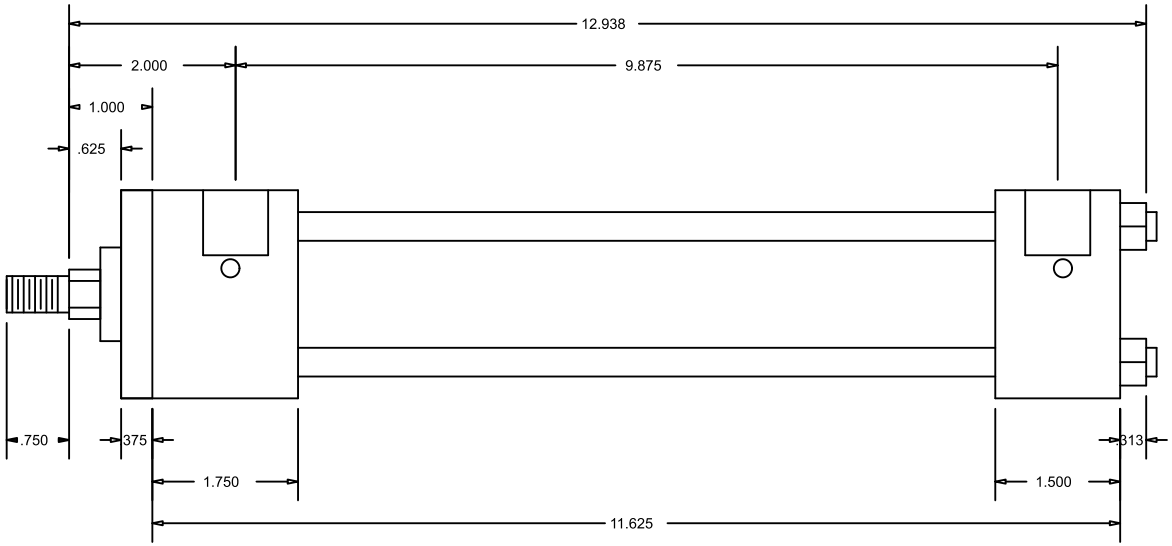

CylindersNow.com
Model No: CN1.5HHFF7CC
Part No: CN1.5HHFF7CC
Rod End Thread: Male 7/16 - 20 x 3/4
Bore: 1.5
Piston Rod Diameter: 5/8
SAE Port Size: -10
Mount: FF
Stroke: 7
Series: HH
Mount Bolt Size: 3/8