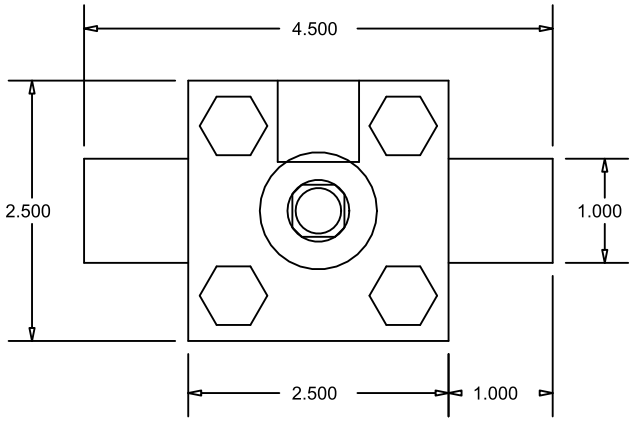

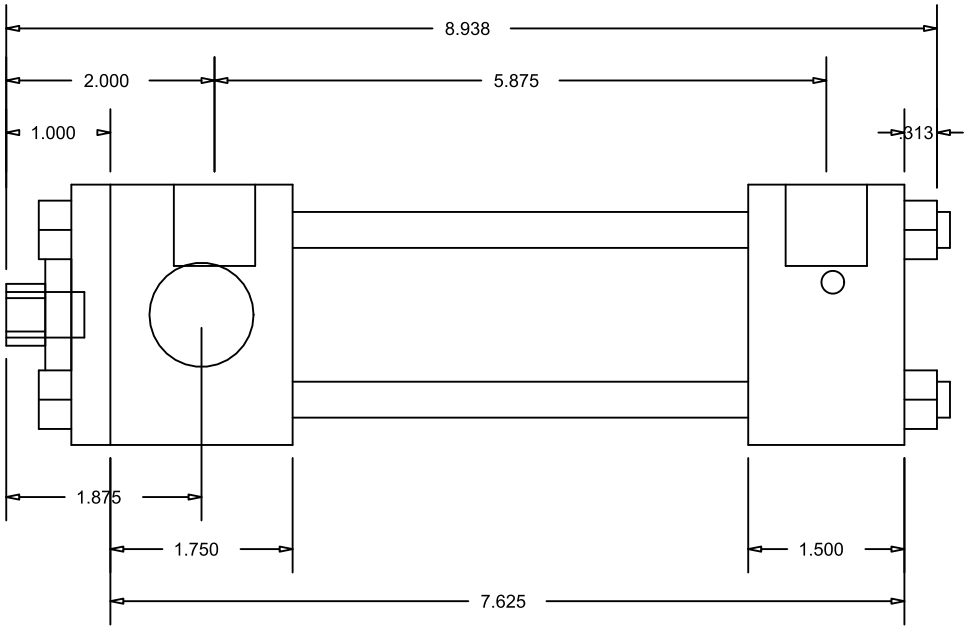

CylindersNow.com
Model No: CN1.5HHTF3CCK(S4)
Part No: CN1.5HHTF3CCK(S4)
Rod End Thread: Female 7/16 - 20 x 3/4
Bore: 1.5
Piston Rod Diameter: 5/8
SAE Port Size: -10
Mount: TF
Stroke: 3
Series: HH