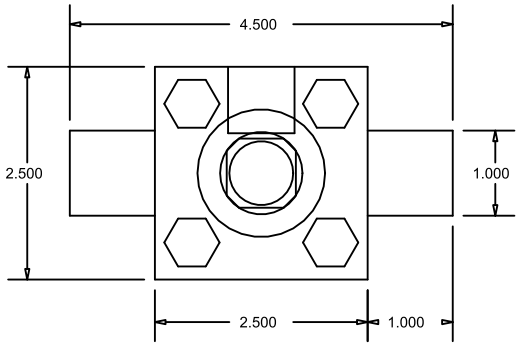

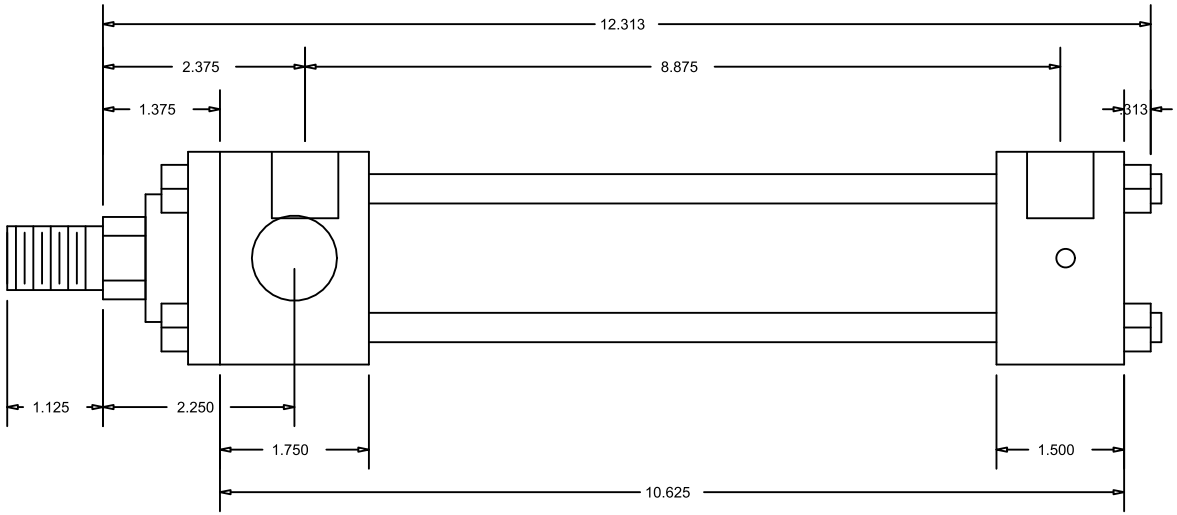

CylindersNow.com
Model No: CN1.5HHTF6CCK(1)
Part No: CN1.5HHTF6CCK(1)
Rod End Thread: Male 3/4 - 16 x 1-1/8
Bore: 1.5
Piston Rod Diameter: 1
SAE Port Size: -10
Mount: TF
Stroke: 6
Series: HH