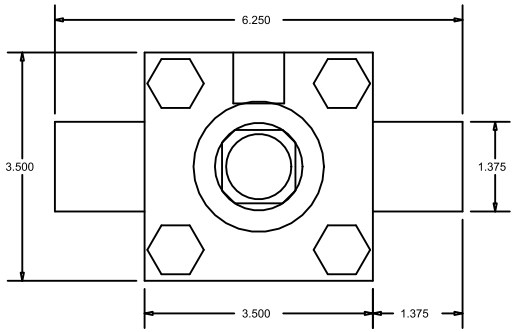

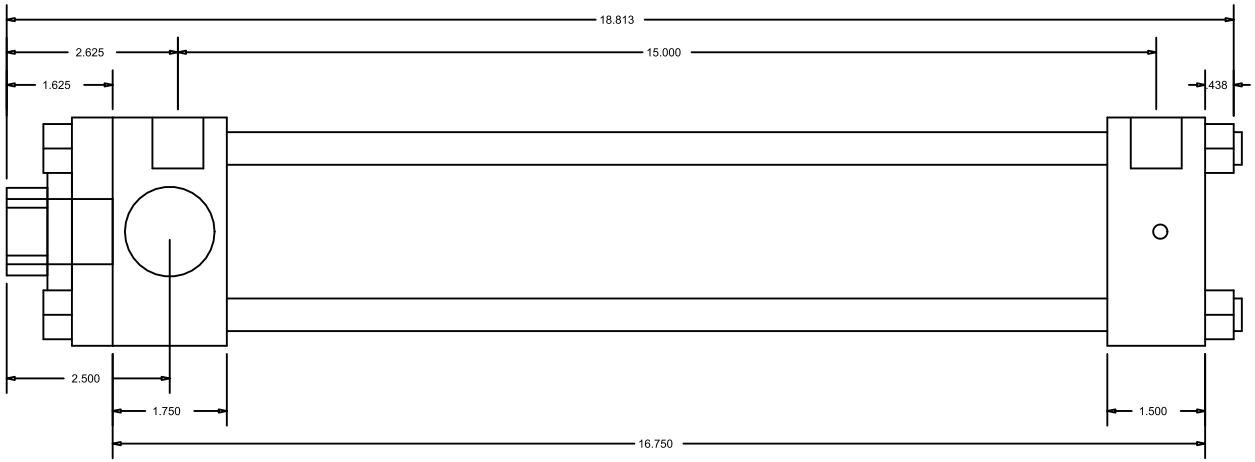

CylindersNow.com
Model No: CN2.5HHTF12CCK(1.375S4)
Part No: CN2.5HHTF12CCK(1.375S4)
Rod End Thread: Female 1 - 14 x 1-5/8
Bore: 2.5
Piston Rod Diameter: 1 3/8
SAE Port Size: -10
Mount: TF
Stroke: 12
Series: HH