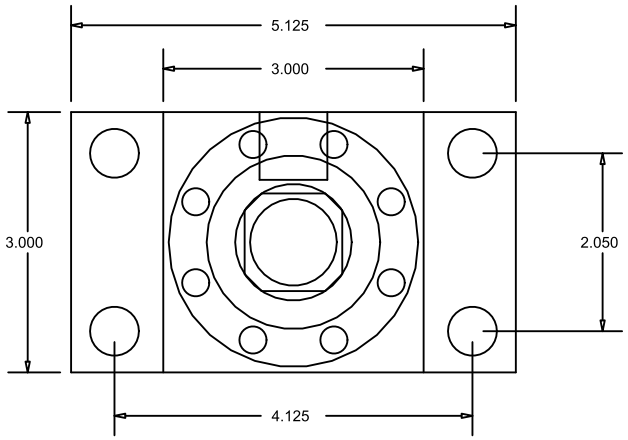

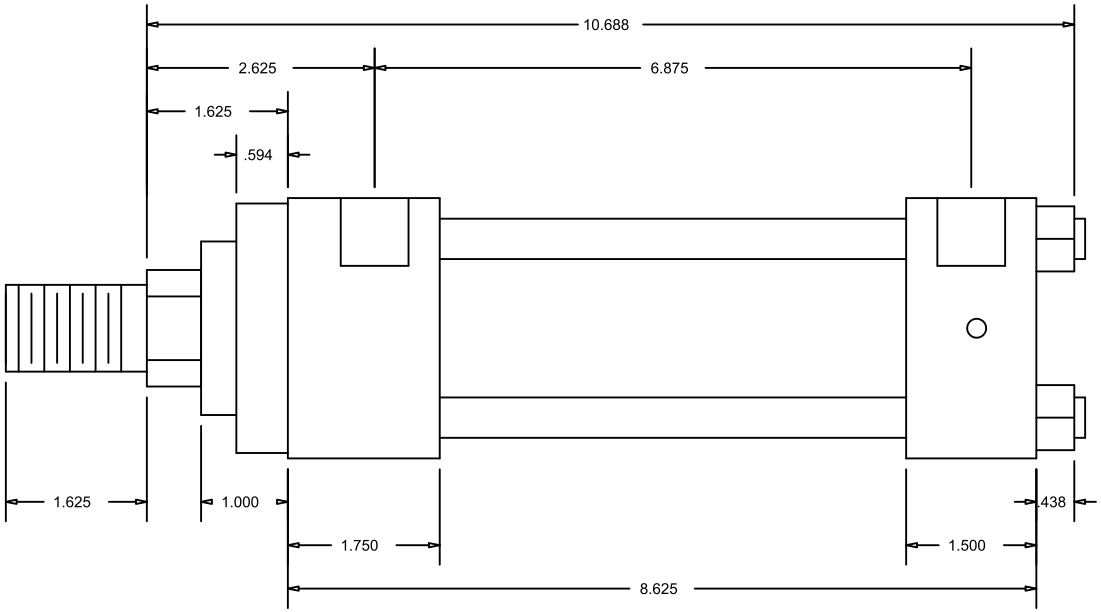

CylindersNow.com
Model No: CN2HHFHF4CCK(1.375)
Part No: CN2HHFHF4CCK(1.375)
Rod End Thread: Male 1 - 14 x 1-5/8
Bore: 2
Piston Rod Diameter: 1 3/8
SAE Port Size: -10
Mount: FHF
Stroke: 4
Series: HH
Mount Bolt Size: 1/2