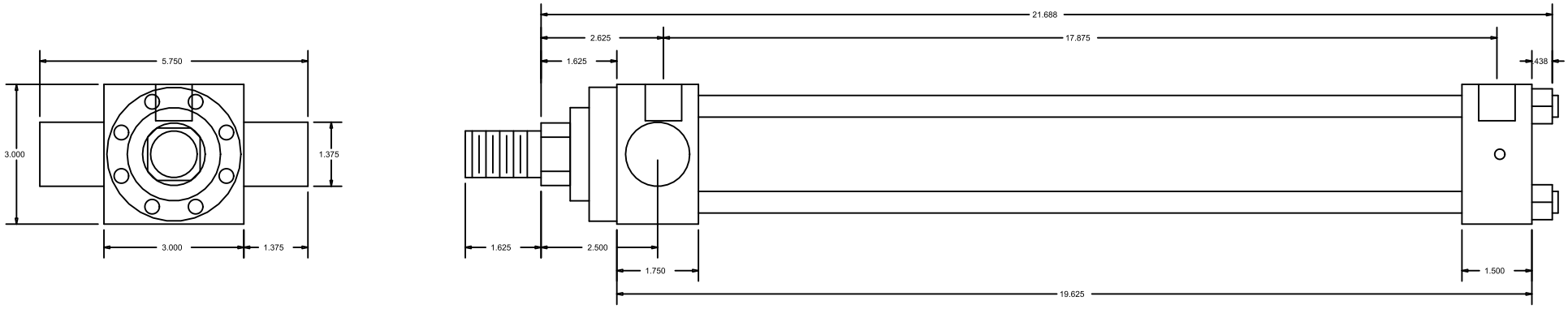

CylindersNow.com
Model No: CN2HHTF15CCK(1.375)
Part No: CN2HHTF15CCK(1.375)
Rod End Thread: Male 1 - 14 x 1-5/8
Bore: 2
Piston Rod Diameter: 1 3/8
SAE Port Size: -10
Mount: TF
Stroke: 15
Series: HH