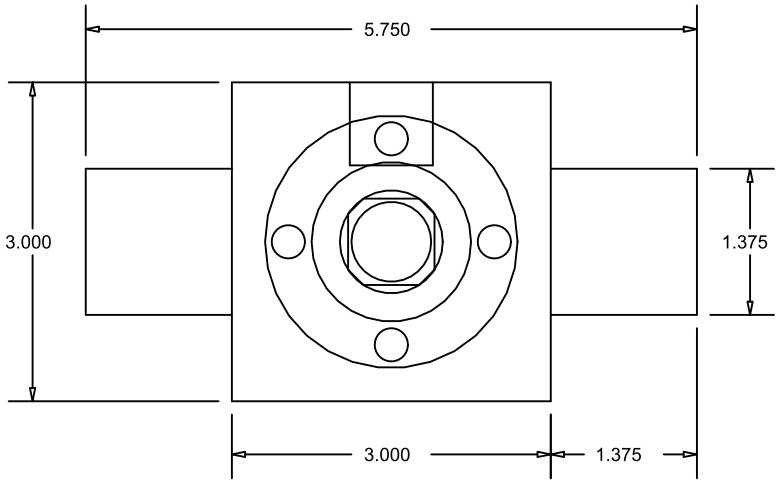

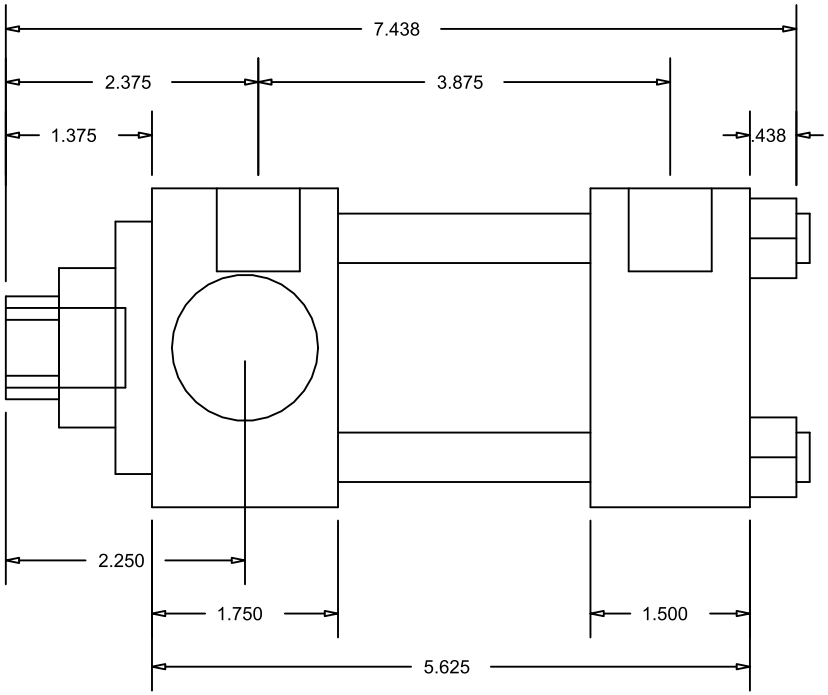

CylindersNow.com
Model No: CN2HHTF1NCK(S4)
Part No: CN2HHTF1NCK(S4)
Rod End Thread: Female 3/4 - 16 x 1-1/8
Bore: 2
Piston Rod Diameter: 1
SAE Port Size: -10
Mount: TF
Stroke: 1
Series: HH