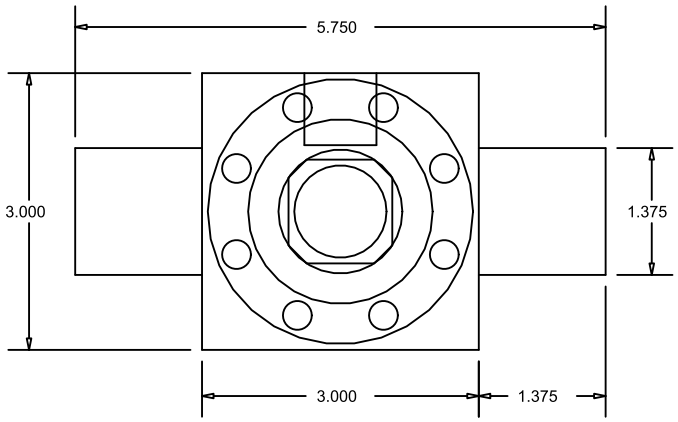

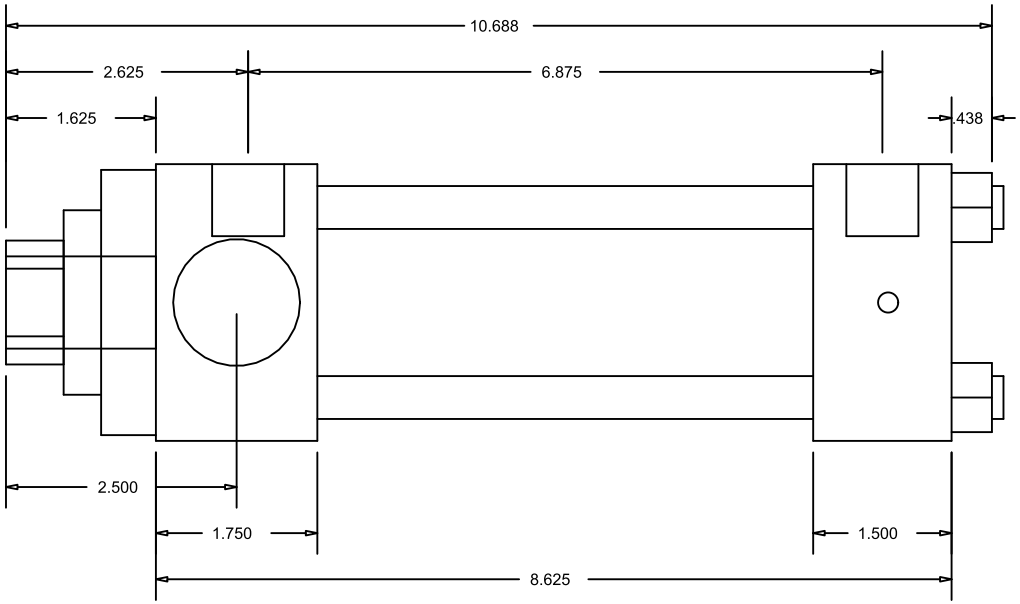

CylindersNow.com
Model No: CN2HHTF4CCK(1.375S4)
Part No: CN2HHTF4CCK(1.375S4)
Rod End Thread: Female 1 - 14 x 1-5/8
Bore: 2
Piston Rod Diameter: 1 3/8
SAE Port Size: -10
Mount: TF
Stroke: 4
Series: HH