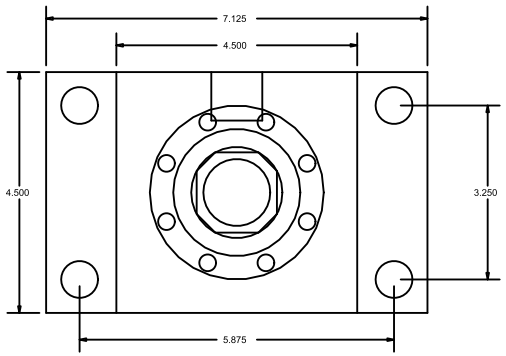

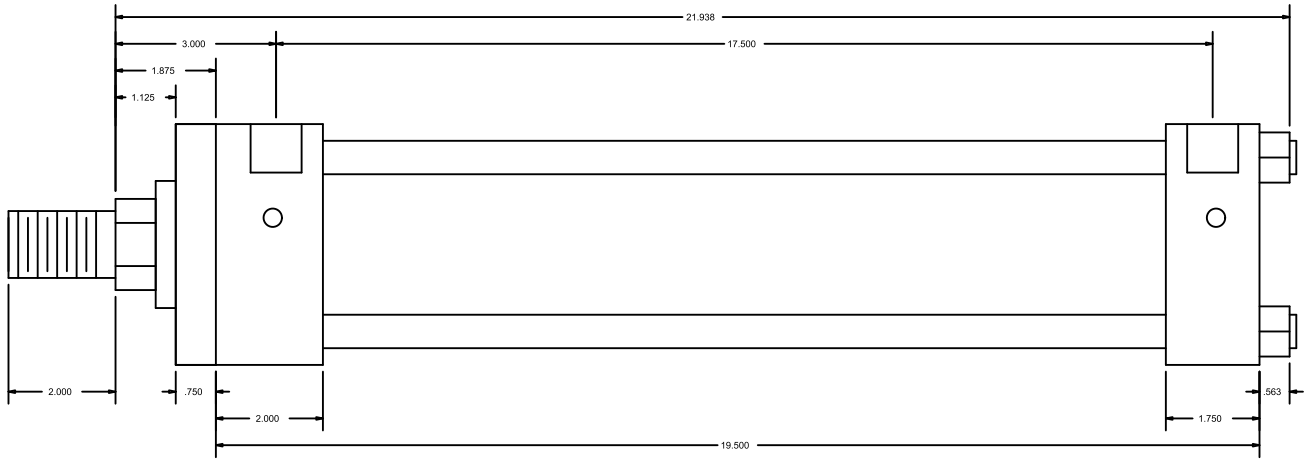

CylindersNow.com
Model No: CN3.25HHFF14CCK(1.75)
Part No: CN3.25HHFF14CCK(1.75)
Rod End Thread: Male 1-1/4 - 12 x 2
Bore: 3.25
Piston Rod Diameter: 1 3/4
SAE Port Size: -12
Mount: FF
Stroke: 14
Series: HH
Mount Bolt Size: 5/8