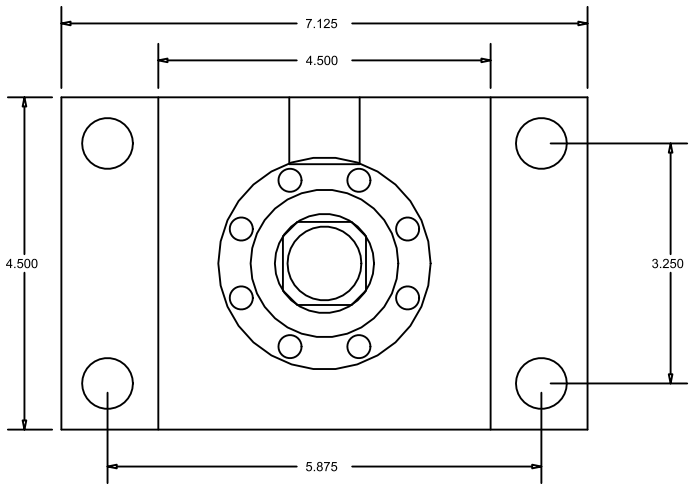

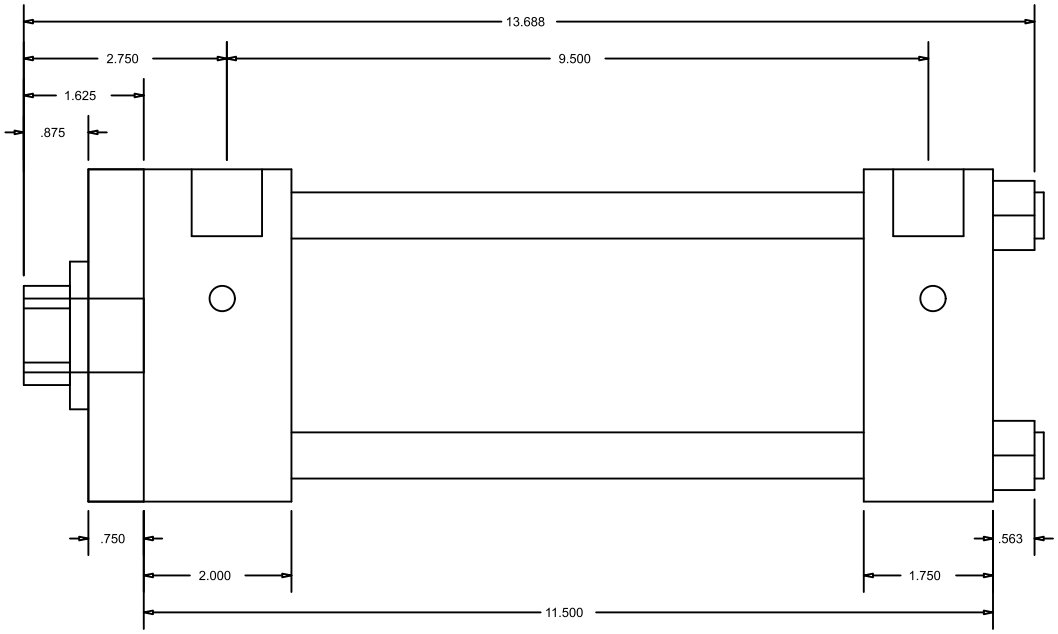

CylindersNow.com
Model No: CN3.25HHFF6CCK(S4)
Part No: CN3.25HHFF6CCK(S4)
Rod End Thread: Female 1 - 14 x 1-5/8
Bore: 3.25
Piston Rod Diameter: 1 3/8
SAE Port Size: -12
Mount: FF
Stroke: 6
Series: HH
Mount Bolt Size: 5/8