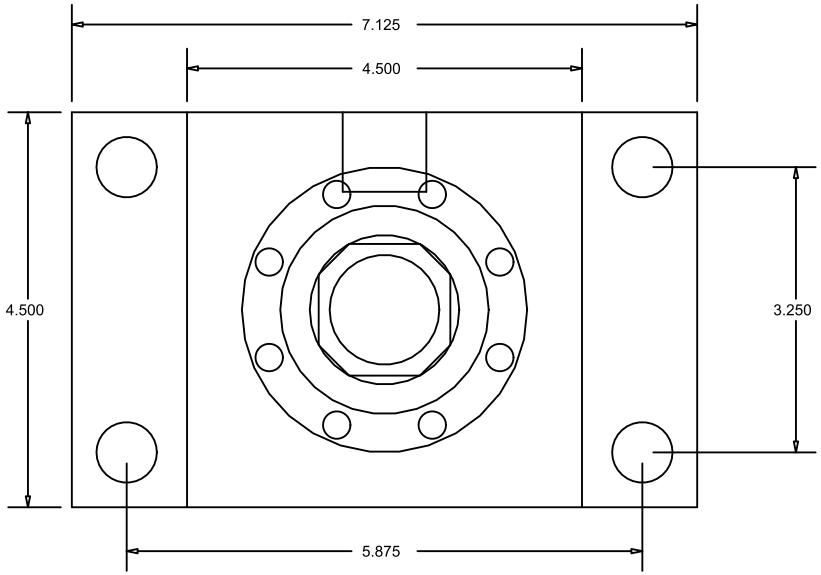

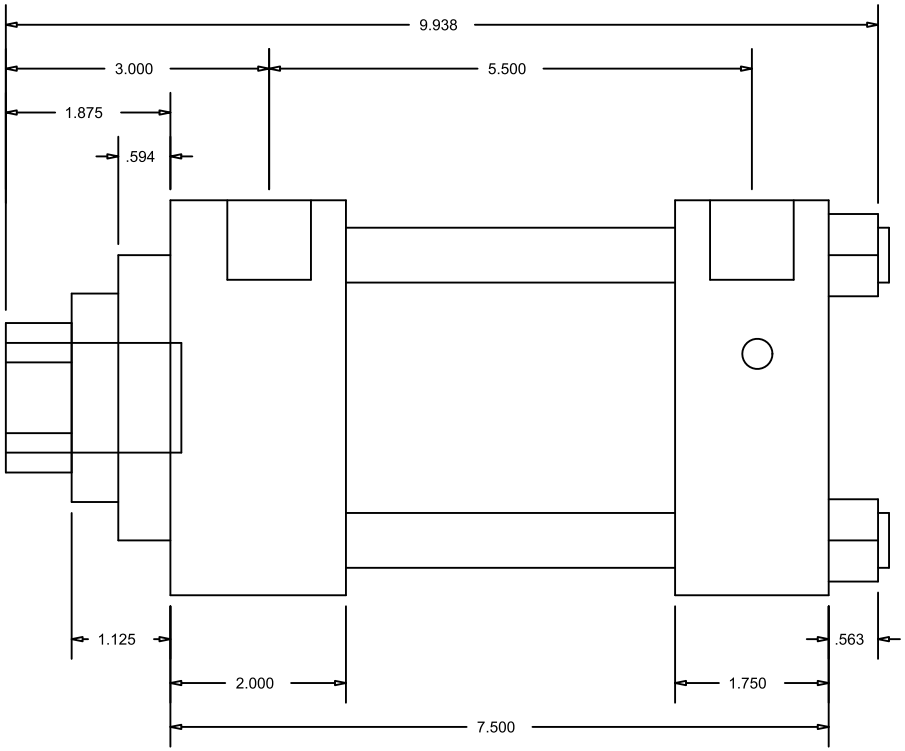

CylindersNow.com
Model No: CN3.25HHFHF2CCK(1.75S4)
Part No: CN3.25HHFHF2CCK(1.75S4)
Rod End Thread: Female 1-1/4 - 12 x 2
Bore: 3.25
Piston Rod Diameter: 1 3/4
SAE Port Size: -12
Mount: FHF
Stroke: 2
Series: HH
Mount Bolt Size: 5/8