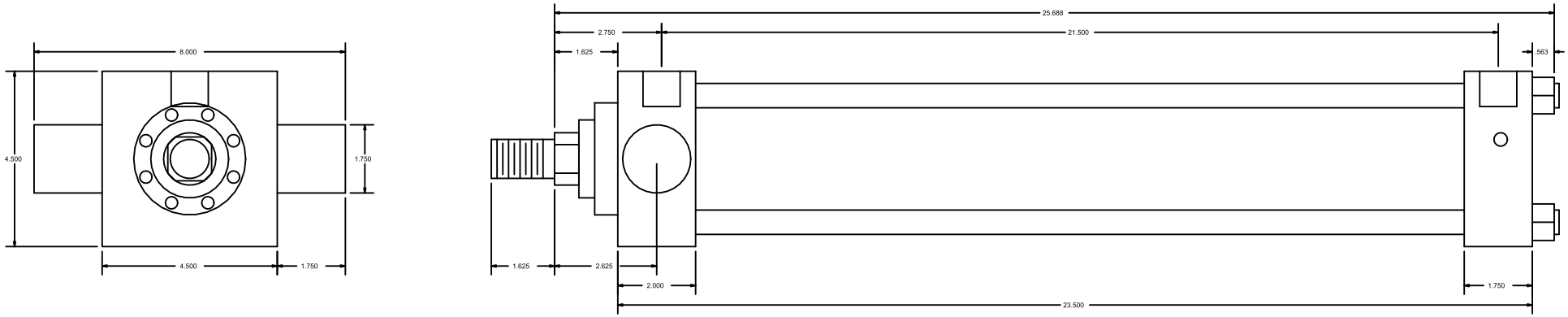


CylindersNow.com
Model No: CN3.25HHTF18CC
Part No: CN3.25HHTF18CC
Rod End Thread: Male 1 - 14 x 1-5/8
Bore: 3.25
Piston Rod Diameter: 1 3/8
SAE Port Size: -12
Mount: TF
Stroke: 18
Series: HH