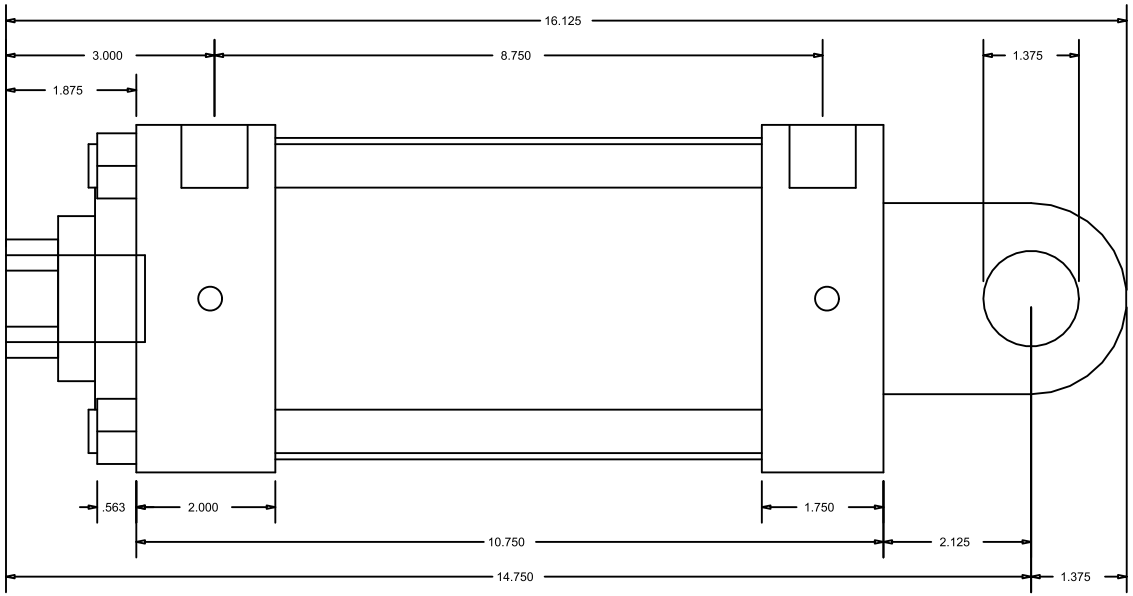

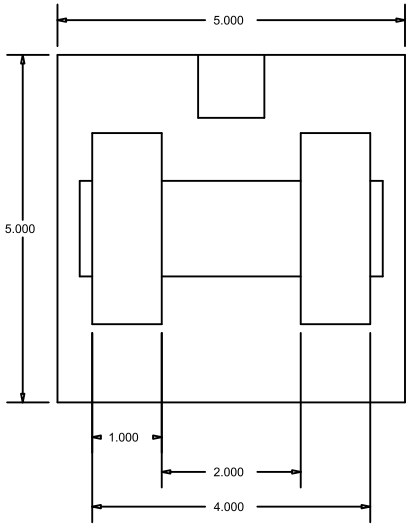

CylindersNow.com
Model No: CN4HHC5CCK(S4)
Part No: CN4HHC5CCK(S4)
Rod End Thread: Female 1-1/4 - 12 x 2
Bore: 4
Piston Rod Diameter: 1 3/4
SAE Port Size: -12
Mount: C
Stroke: 5
Series: HH