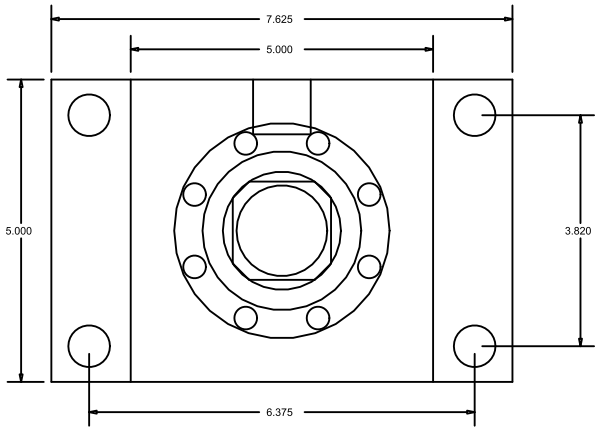

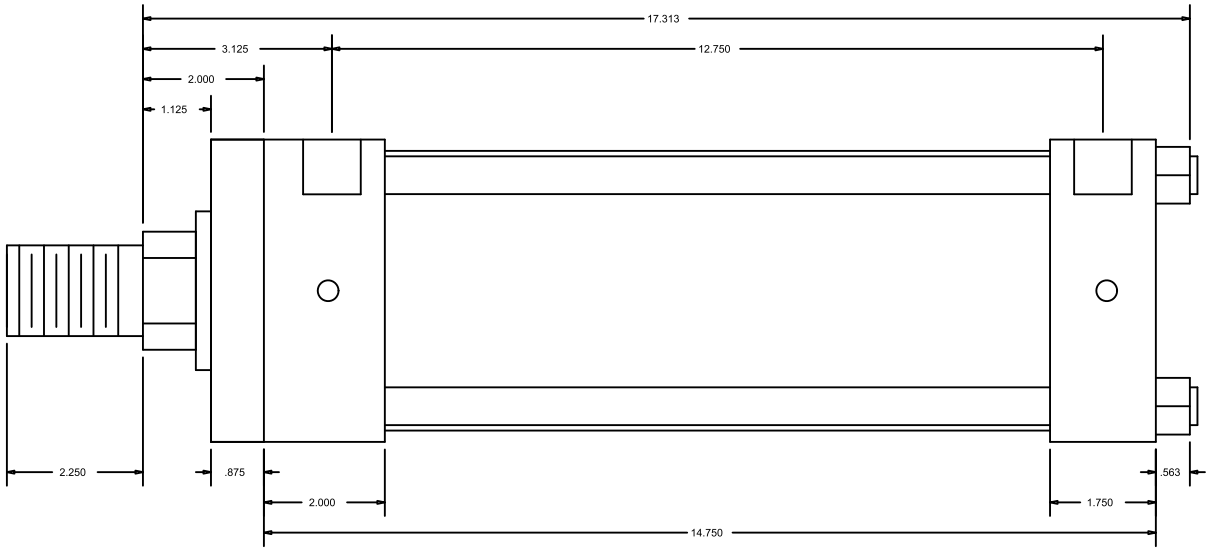

CylindersNow.com
Model No: CN4HHFF9CCK(2)
Part No: CN4HHFF9CCK(2)
Rod End Thread: Male 1-1/2 - 12 x 2-1/4
Bore: 4
Piston Rod Diameter: 2
SAE Port Size: -12
Mount: FF
Stroke: 9
Series: HH
Mount Bolt Size: 5/8