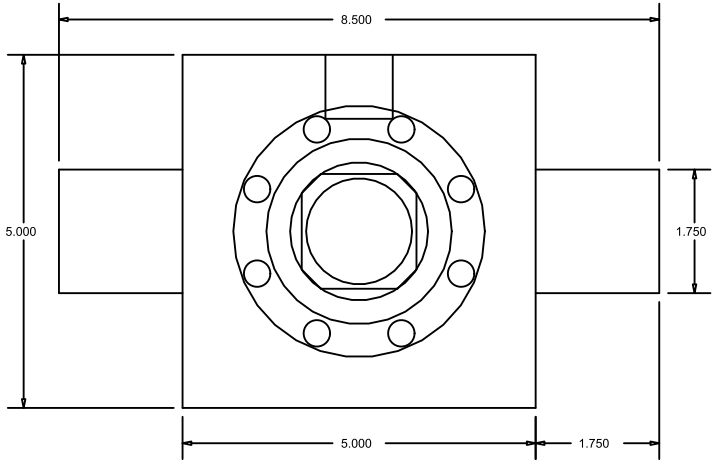

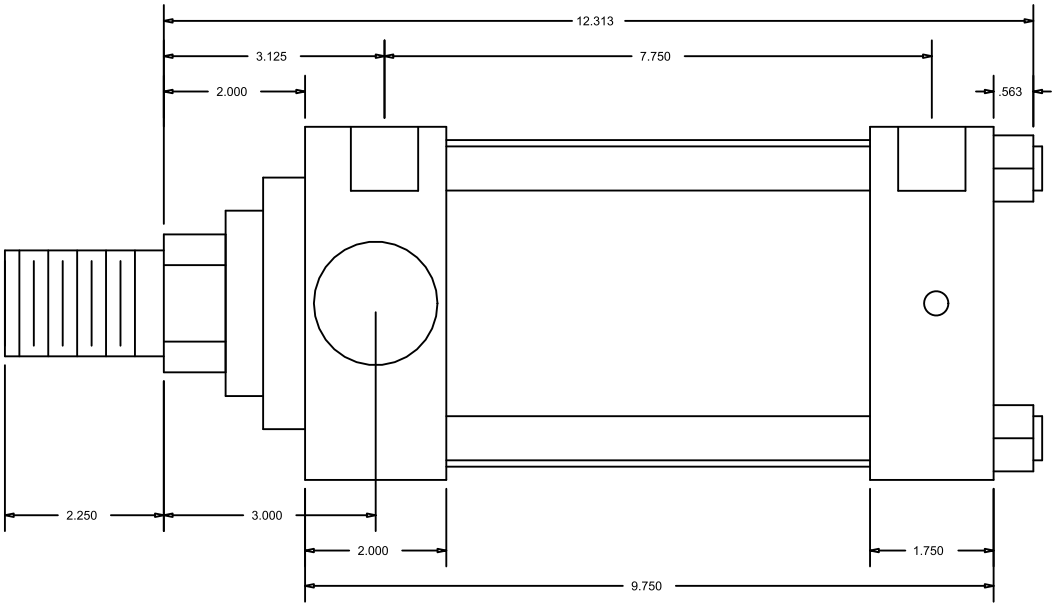

CylindersNow.com
Model No: CN4HHTF4CCK(2)
Part No: CN4HHTF4CCK(2)
Rod End Thread: Male 1-1/2 - 12 x 2-1/4
Bore: 4
Piston Rod Diameter: 2
SAE Port Size: -12
Mount: TF
Stroke: 4
Series: HH