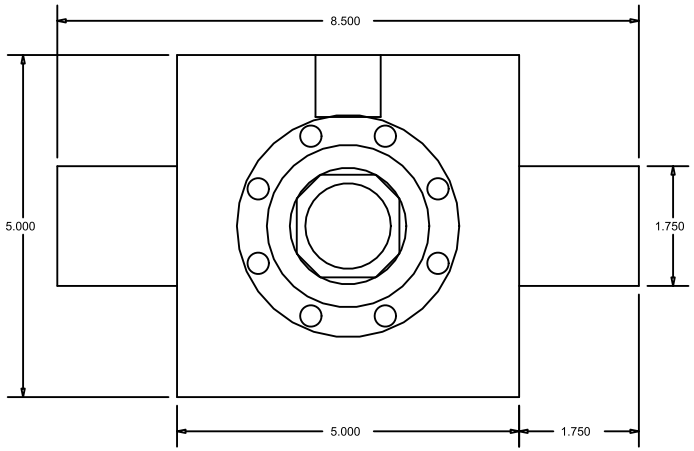

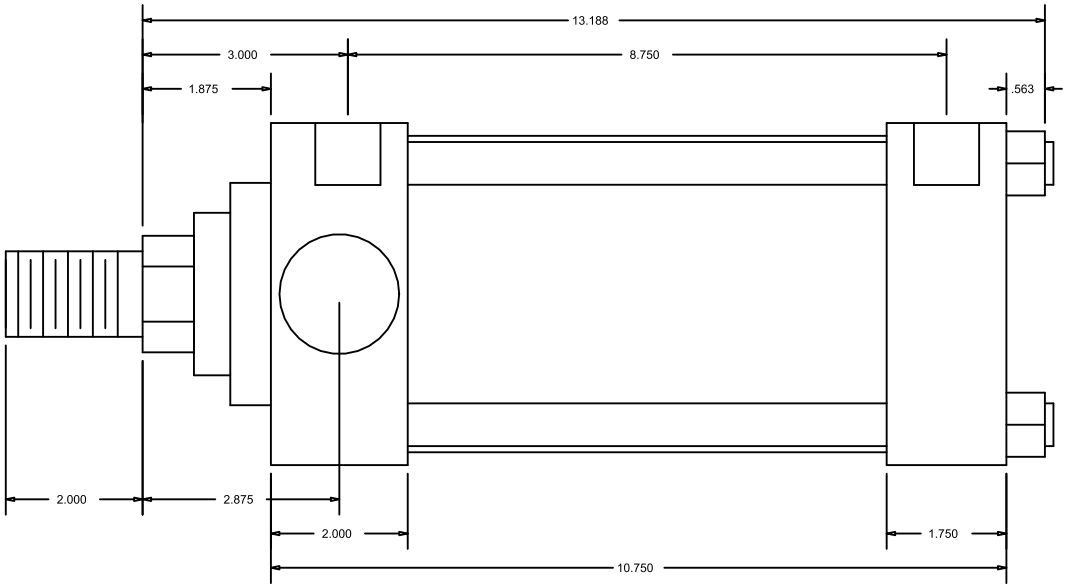

CylindersNow.com
Model No: CN4HHTF5NC
Part No: CN4HHTF5NC
Rod End Thread: Male 1-1/4 - 12 x 2
Bore: 4
Piston Rod Diameter: 1 3/4
SAE Port Size: -12
Mount: TF
Stroke: 5
Series: HH