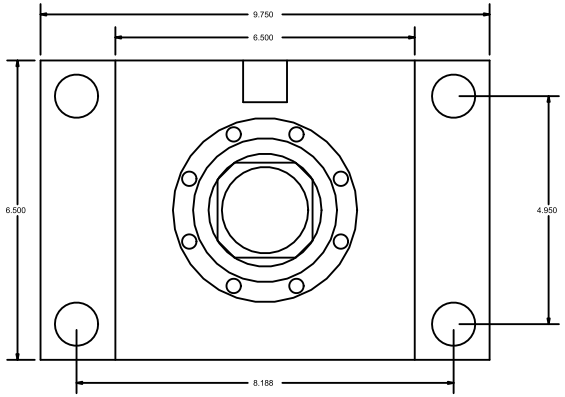

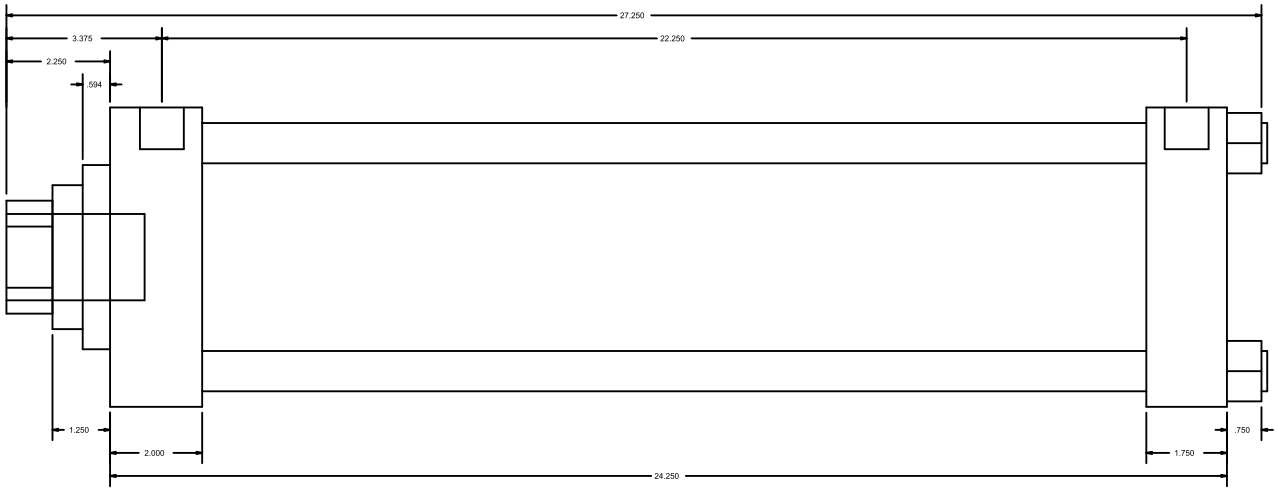

CylindersNow.com
Model No: CN5HHFHF18NCK(2.5S4)
Part No: CN5HHFHF18NCK(2.5S4)
Rod End Thread: Female 1-7/8 - 12 x 3
Bore: 5
Piston Rod Diameter: 2 1/2
SAE Port Size: -12
Mount: FHF
Stroke: 18
Series: HH
Mount Bolt Size: 7/8