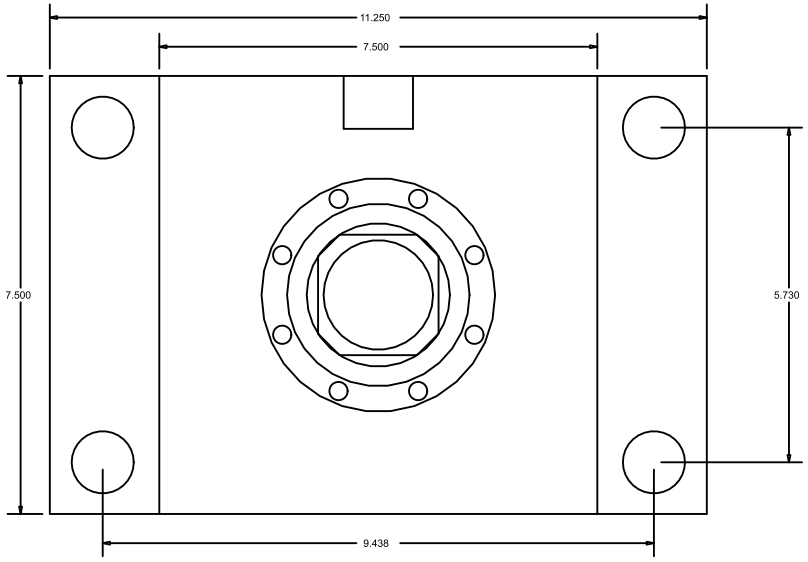

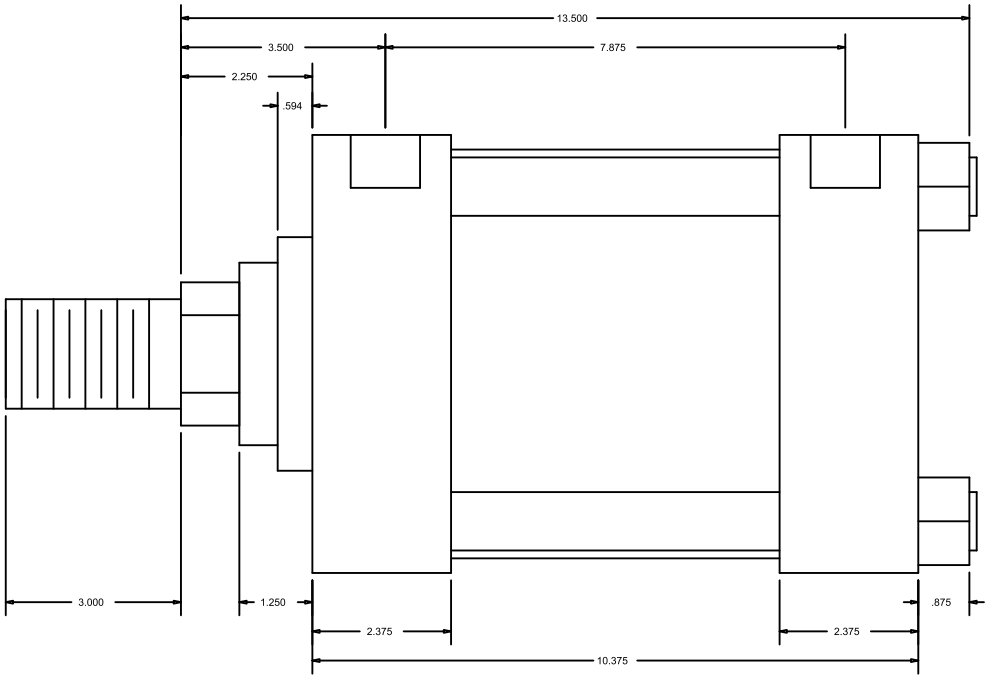

CylindersNow.com
Model No: CN6HHFHF3NC
Part No: CN6HHFHF3NC
Rod End Thread: Male 1-7/8 - 12 x 3
Bore: 6
Piston Rod Diameter: 2 1/2
SAE Port Size: -16
Mount: FHF
Stroke: 3
Series: HH
Mount Bolt Size: 1