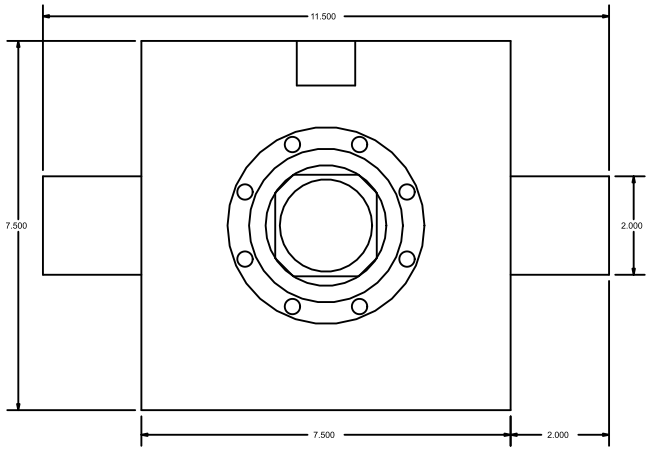

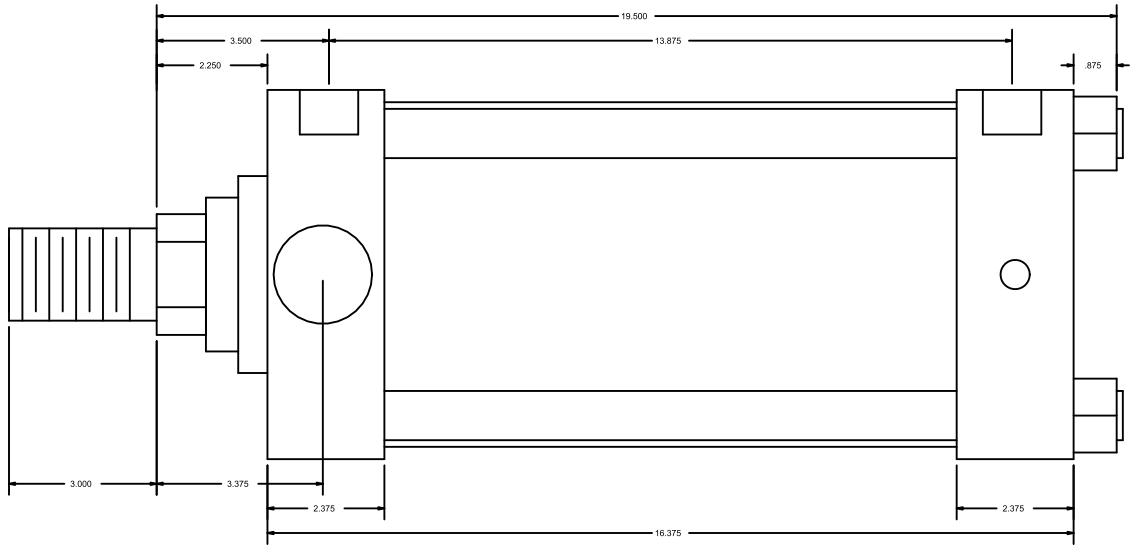

CylindersNow.com
Model No: CN6HHTF9CC
Part No: CN6HHTF9CC
Rod End Thread: Male 1-7/8 - 12 x 3
Bore: 6
Piston Rod Diameter: 2 1/2
SAE Port Size: -16
Mount: TF
Stroke: 9
Series: HH