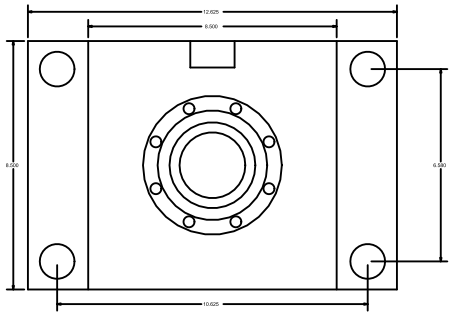

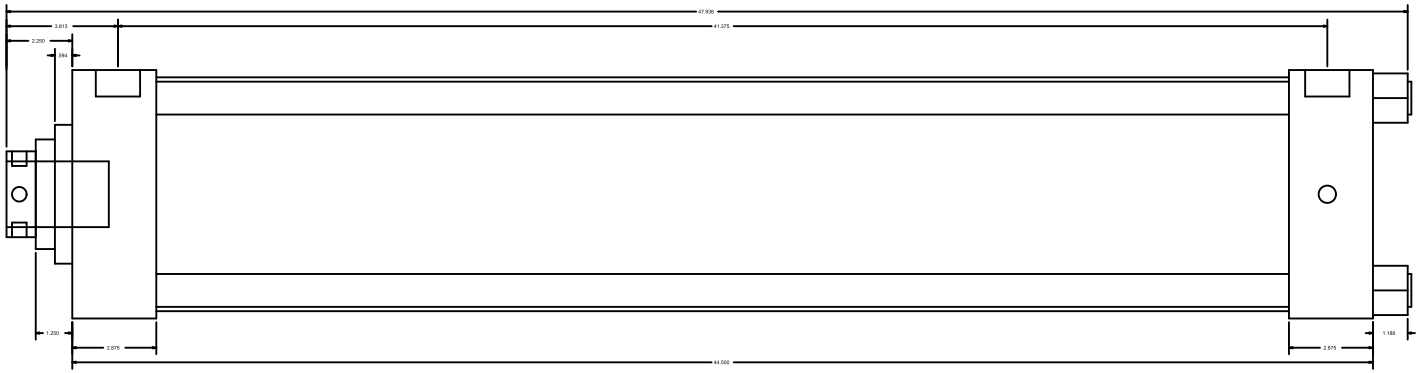

CylindersNow.com
Model No: CN7HHFHF36CCK(S4)
Part No: CN7HHFHF36CCK(S4)
Rod End Thread: Female 2-1/4 - 12 x 3-1/2
Bore: 7
Piston Rod Diameter: 3
SAE Port Size: -20
Mount: FHF
Stroke: 36
Series: HH
Mount Bolt Size: 1 1/8