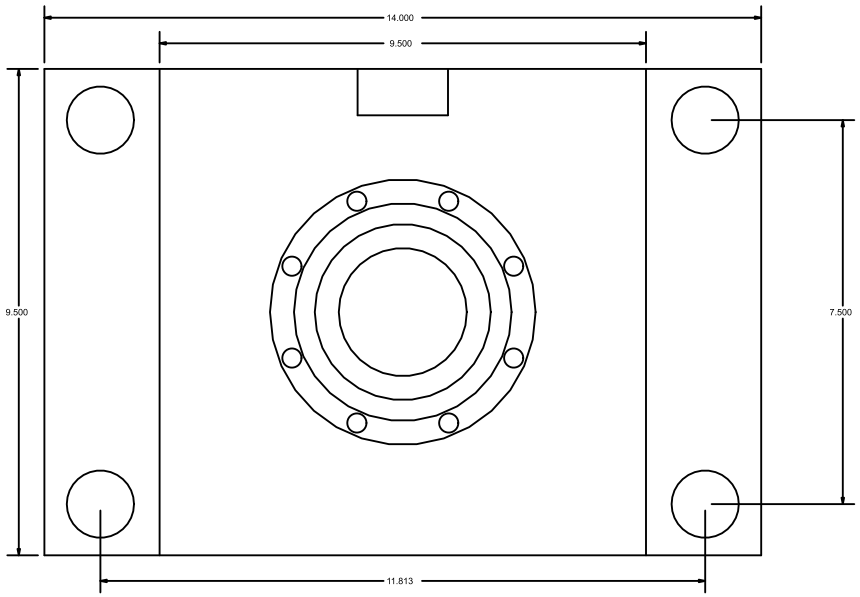

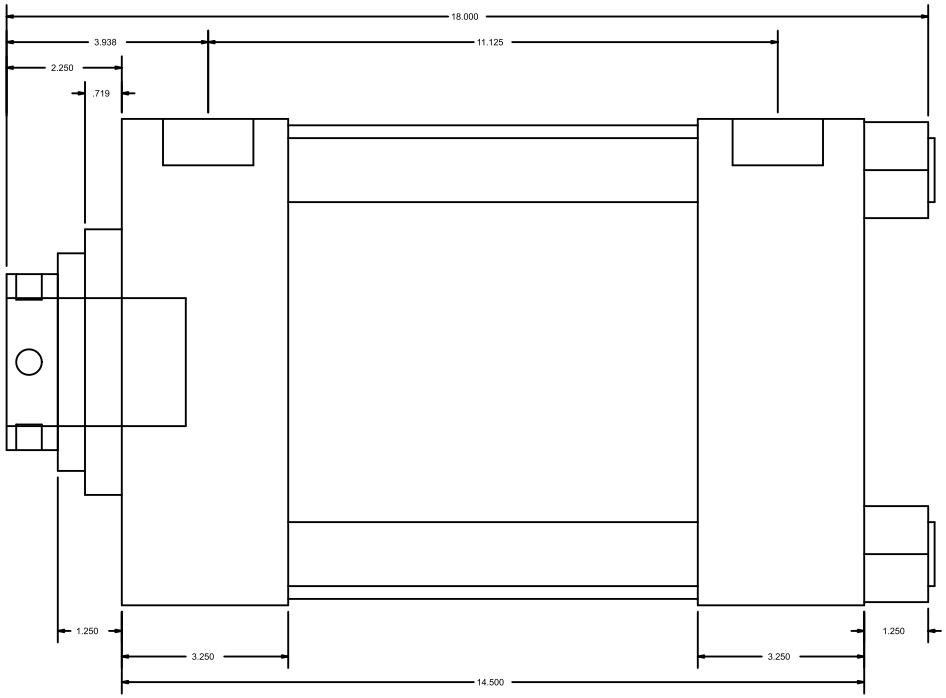

CylindersNow.com
Model No: CN8HHFHF5NCK(S4)
Part No: CN8HHFHF5NCK(S4)
Rod End Thread: Female 2-1/2 - 12 x 3-1/2
Bore: 8
Piston Rod Diameter: 3 1/2
SAE Port Size: -24
Mount: FHF
Stroke: 5
Series: HH
Mount Bolt Size: 1 1/4