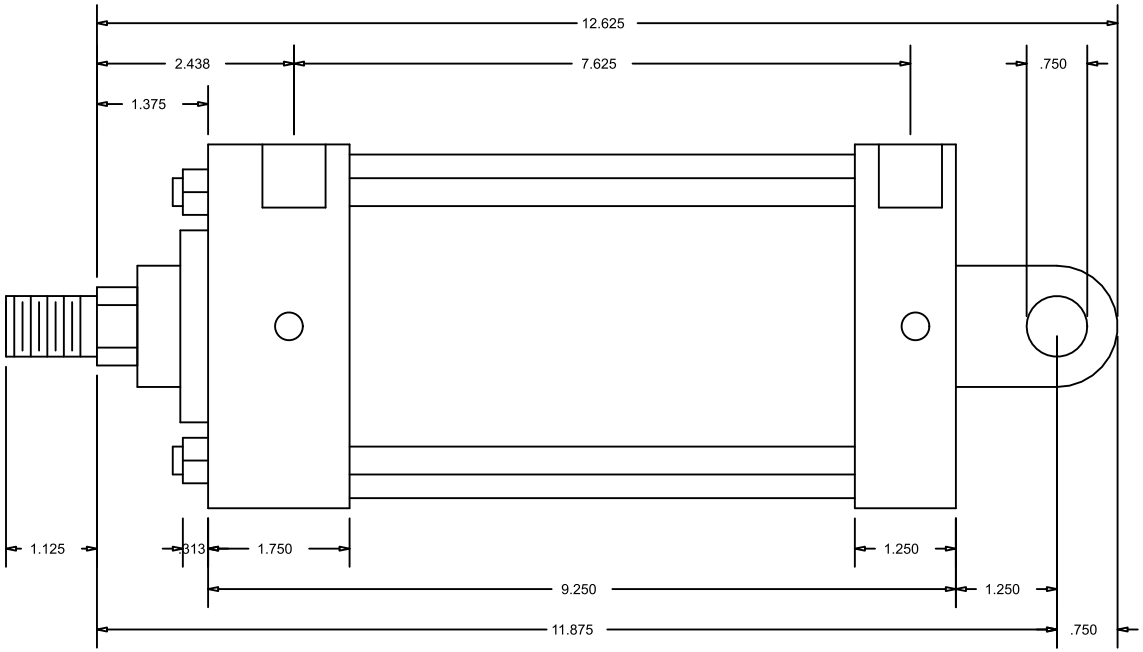

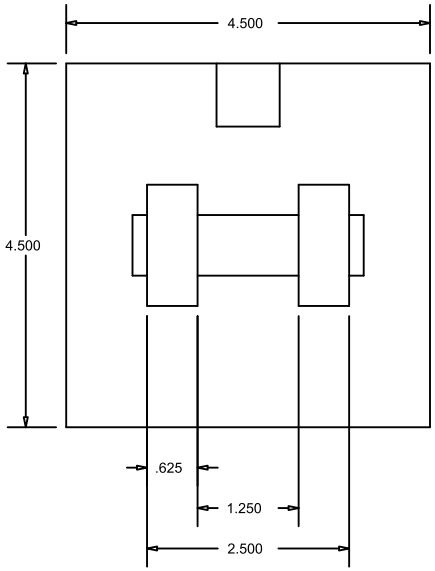

CylindersNow.com
Model No: CN4MHC5CC
Part No: CN4MHC5CC
Rod End Thread: Male 3/4 - 16 x 1-1/8
Bore: 4
Piston Rod Diameter: 1
SAE Port Size: -10
Mount: C
Stroke: 5
Series: MH